Core Products Catalog

Copyright © 2024 Conwed. All rights reserved.

This catalog, including all text, images, illustrations, graphics, photographs, product descriptions, and design elements, is protected by copyright law and international treaties.

No part of this catalog may be reproduced, distributed, or transmitted in any form or by any means, including photocopying, recording, or other electronic or mechanical methods, without the prior written permission of the Copyright Owner.

All product names, trademarks, and service marks mentioned in this catalog are the property of their respective owners and are used for identification purposes only.

Date of last revision: 11.07.2023

Table of contents

Icon glossary 04

Core Products 08

Building a product 10
- *Materials & definitions* 12
- *Impact level* 14
- *Finishes* 16
- *Shapes & sizes* 18
- *Edge details* 20
- *Mounting* 22
- *Cleaning* 24
- *CEXP* 26

Wall panels 30

Ceiling panels 48

Tiles 66

Baffles 78

Clouds 92

Streamline 104

Icon glossary

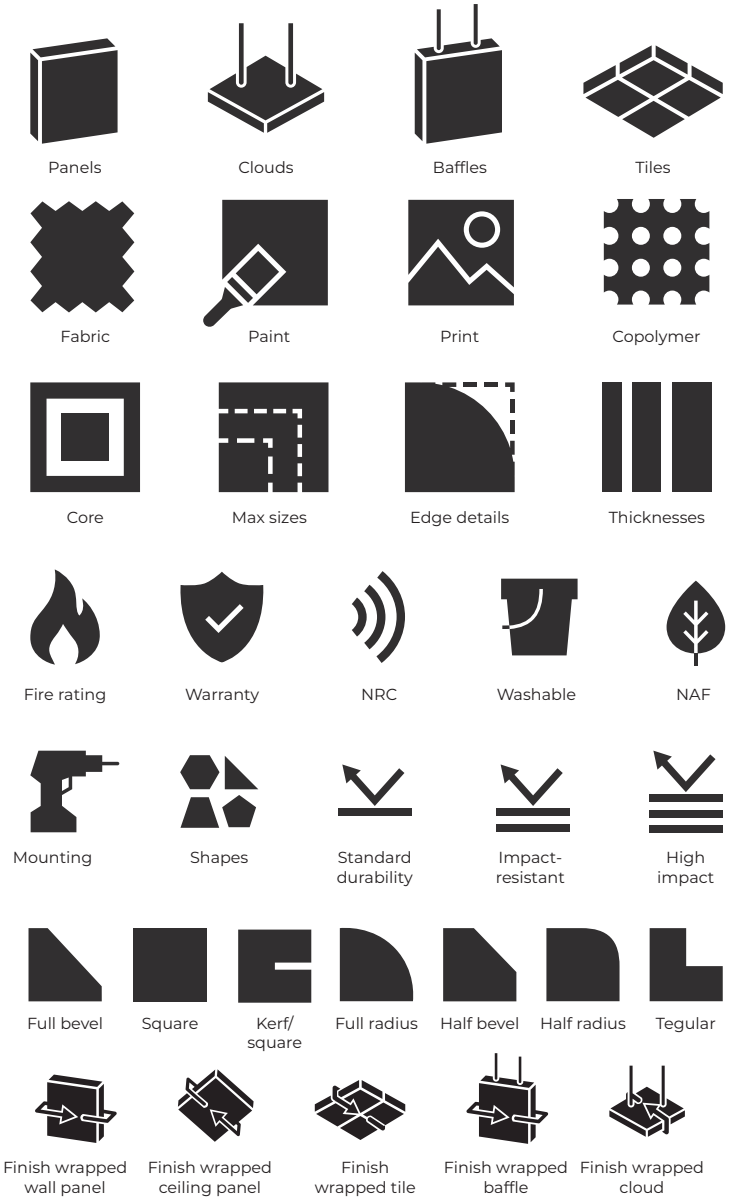

West Governor University
Salt Lake City, Utah
Cloud | Paint | A

What are Core Products?

The acoustic solution industry is primarily built on four key product categories: Panels, Tiles, Baffles, and Clouds. There are a number of ways to finish and install each one, they can even be given unique names, but there's no denying that they make up the core of the market. What makes Conwed Core Products special is the level of quality regardless of how you choose to customize them.

All of our Core Products are made of the same ASTM E84-qualified materials, tested at an NVLAP-accredited laboratory, and are finished with textiles and materials from the best suppliers in the industry. If you aren't sure where to start or need help through the process, our CEXP team will manage your project for you.

Conwed lets you design an acoustic solution no matter the complexity. We'll handle the rest.

Building a product

Every product is constructed of the same key components and variables. These pages will explain each one in detail.

12 Materials & definitions

14 Impact level

16 Finishes

18 Shapes & sizes

20 Edge details

22 Mounting

24 Cleaning

26 CEXP

Looking for diffusers or reflectors? Check out our Specialized catalog for products that can do more than absorb.

Materials & definitions

Terms you may not recognize on your first pass.

Basic product construction

Fiberglass core
A 6-7 PCF fiberglass board for excellent acoustic performance.

Resin-hardened edge
Liquified hot resin is sprayed onto the edges of products to create a strong perimeter.

Finish wrapped
The outermost layer of a product is referred to as its finish and is wrapped around all sides.

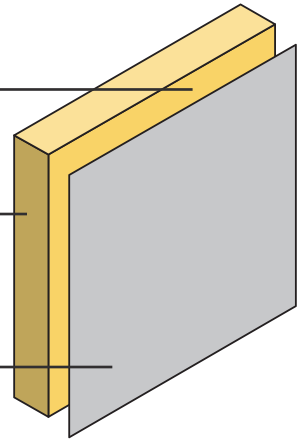

IR layer

An impact-resistant layer of ⅛" tackable fibers.

Conwed hot melt

Our very own method of finish adhesion among our products; ensures a smooth finish with no bubbling.

Mineral core

A high-density mineral board that's able to be perforated and unperforated.

Copolymer

A 1⁄16" sheet of perforated, resilient, plastic with a smooth finish. Copolymer is used for our **high impact (HI)** durability.

Scrim

Specially formulated finish layer with a drywall texture. Meant to be painted or printed onto.

NAF (no added formaldehyde)

Same as our PCF standard, but with no added formaldehyde to help environmentally-conscious LEED projects.

Product identification

You'll notice simpler labels alongside the older product names you may have heard before. No matter what product name you submit in a spec though, we'll handle it.

Respond A, IR, HI	▸ **Fabric A, IR, HI**
New Dimensions	▸ **Paint**
Foundations	▸ **Unpainted**
Metro Rebound	▸ **Copolymer**
Acoustic Art	▸ **Print**

Impact level

Before selecting a finish, you'll want to determine the right level of protection for your project needs. Not all finishes have each level of durability available.

Three levels of durability

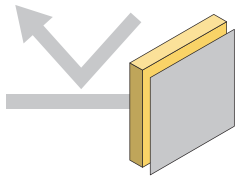

A

Standard core strength. Selected finish layered on top of a fiberglass core. Can be touched, but not meant for regular contact.

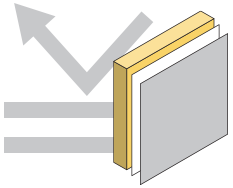

IR

Impact-resistant layer beneath the finish. This level can withstand being bumped into in crowded hallways.

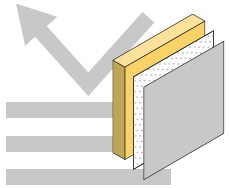

HI

A copolymer finish or layer beneath fabric. Our strongest material can withstand a stray soccer ball when someone misses the goal. Great for busy and active areas.

Finishes

Fabric ▸

Carnegie DESIGNTEX maharam kvadrat Knoll Guilford of Maine

Paint ▸

Any color imaginable from Sherwin Williams.

SHERWIN WILLIAMS

Copolymer ▸

A highly durable, smooth, thermo-formed plastic that comes in a variety of colors and wood grains.

KYDEX
UrbanForest

Print ▸

Apply any image to your product, or across multiple products, for a panoramic display.

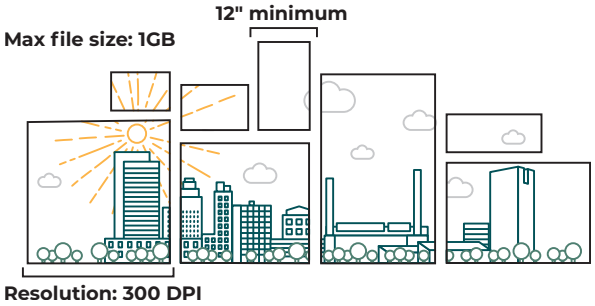

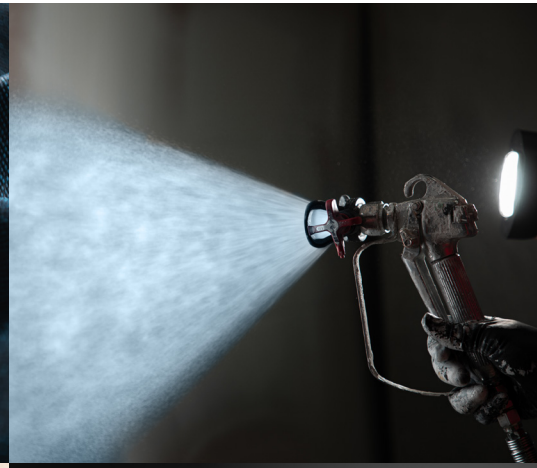

Product & finish compatibility

	Fabric A	Fabric IR	Fabric HI	Paint A	Paint IR	Print IR	Copolymer HI
Wall panels	✓	✓	✓		✓	✓	✓
Ceiling panels	✓	✓	✓	✓	✓	✓	✓
Tiles	✓	✓		✓		✓	
Baffles	✓	✓		✓			
Clouds	✓	✓		✓		✓	

Shapes & Sizes

Products can be cut into custom shapes within reason.

Designs with many sharp angles or fine points are difficult;

but curves, slopes, and geometric shapes are all welcome.

Joining panels

Spline/kerf

Kerf edges with spline connect panels uniformly, allowing designs larger than a single panel to maintain their shape.

Max sizes

4'x12' and 5'x10' are our most common maximum sizes, normally only limited by thickness.

NAF only

4'x10'
1" 2" 3" 4"

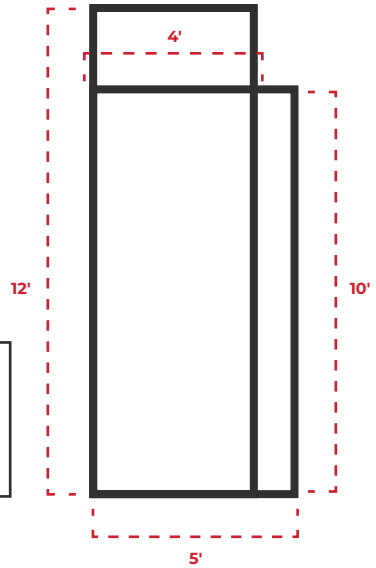

Thicknesses by panel size

4'×12'
½" 1" 1.5" 2"
2.5" 3"

5'×10'
1" 1.5" 2" 3"

4"
24 sqft

4'×10'
½" ¾" 1.5"

Custom shapes

All designs are reviewed by our engineering team for approval.

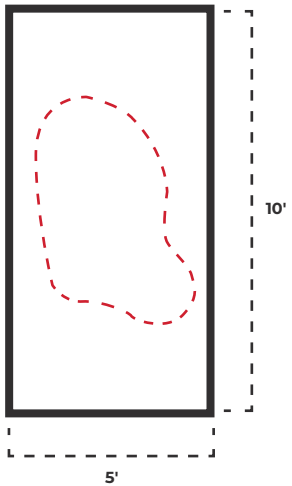

We use CNC machines for custom shapes.

Acceptable examples

✓

X

→ 4" core max

Edge details

Edge details can serve as both stylish and functional additions to your project, only limited by the product's finish. Depending on the core thickness you select, these edges will appear different.

For more more edge details, capabilities, and inquiries, contact CEXP@conwed.com

Our most commonly used options

Square

Kerf/square
Used for spline

Full radius

Half radius

½ bevel

¼ bevel

Full bevel

Miter

Tile edge details

Lay-in square
The classic style for ceiling tiles.

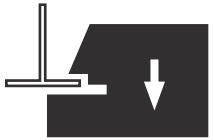

Gridlock
A specialized edge that hides the majority of the grid behind it.

Tegular
Reveals more tile past the grid for aesthetic purposes.

Mounting

Joining

Spline/kerf
For uniformly joining panels together using kerf edges and spline hardware.

Ready for hardware

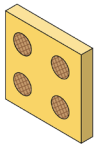

Resin spots
Creates solid structural points for hardware to screw into.

Hardware for suspension

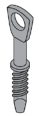

Acoustical anchor
For clouds only.

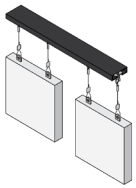

Express Hanging System
A modular system for fast, square, and level suspension from 1¾" to 10'.

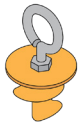

Rotofast® cloud anchor

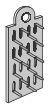

Baffle hangers
Holds baffle layers together and creates connection points.

Hardware for wall & ceiling

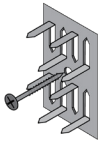

Impaling clips
Used to hold product while adhesive cures

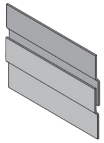

Z-bar to z-bar
Primarily for ceiling.

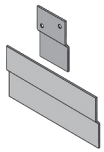

Aluminum z-clip to z-bar

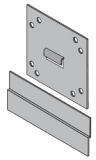

Z-clip plate to z-bar

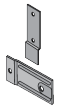

Z-clip to dw-bracket

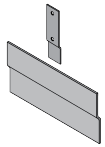

Z-clip to z-bar

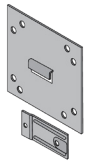

Z-clip plate to DW bracket

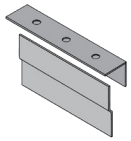

L-angle
Only for diffusers. See **Specialized** guide.

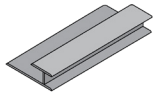

Spline
Used with Kerf edges.

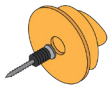

Rotofast® anchor

Install Guides, diagrams, & more at
conwed.com/mounting-options

Cleaning

Most Conwed products are cleanable, with the method

varying depending on the finish of your project.

Fabric & painted finishes including gel coats

Light dust removal with a brush or vacuum. Dry chemical sponge for fingerprints and light soiling. An art gum eraser can also remove grime buildup.

Consult fabric manufacturer for more vigorous treatments

Most polyester fabrics clean well by sponging with the foam from a mild detergent or upholstery shampoo, followed by rinsing with a clean sponge. Other cleaning agents, including solvent-based cleaners, can be used to remove spots, however first pre-test in an unseen area.

Gel coat touch-ups

Cleanable with rubbing alcohol and cloth. Can be repainted in small areas with matching paint and an art brush.

Copolymer finishes

Mild soap and warm water will remove ordinary dirt and smudges. Formula 409, Lestoil, and Fantastik can all be used for heavier soiling.

Note: These guidelines are given in good faith to help avoid common errors. They are not intended to be a step-by-step list of instructions or a checklist, and it is assumed the user has general cleaning knowledge. Conwed bears no responsibility for any cleaning or maintenance actions taken or not taken, and is not responsible for cleaning personnel selection.

Working with Conwed doesn't stop at ordering a product. Our CEXP team can help with every stage of your project.

- ✓ **Design assistance**
- ✓ **Take-offs**
- ✓ **Complex project management**
- ✓ **Installation coordination**

419.871.9084

CEXP@conwed.com

This project had over 800 unique panels, each translated in CAD from the original designs, barcoded and validated through production, with installation coordinated from across the country.

Core Products

Wall panels

Build your panel

Select your finish

Levels of durability

Durability & finish compatibility

	Fabric A	Fabric IR	Fabric HI	Paint A	Paint IR	Print IR	Copolymer HI
Wall panels	✓	✓	✓		✓	✓	✓
Ceiling panels	✓	✓	✓	✓	✓	✓	✓

½" ▸ 4 ⅛"

Available in a range of thicknesses.

NRC

Each product combination has its own NRC value. These values are obtained from tests conducted according to ASTM C423 procedures in an NVLAP-accredited laboratory.

Edge details

Mounting

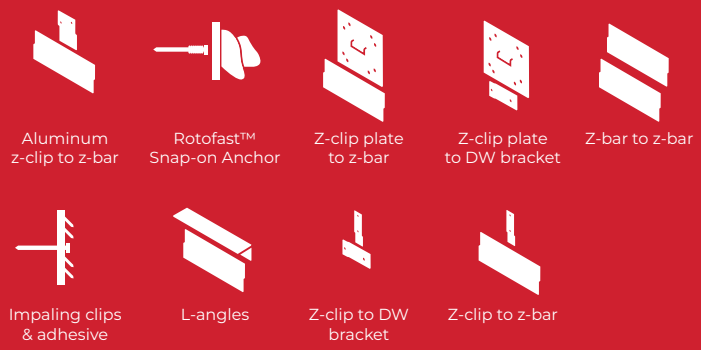

High walls

Libraries

Music rooms

Wall panel

Fabric | A

Compatibility

Edge details	Radius	Miter	Bevel	Square	Kerf/square	Mounting method	Resin spots	Impaling clips	Z-bar to z-bar	DW bracket to z-clip plate	Aluminum z-clip to z-bar	L-angle	Z-bar to z-clip plate	Spline	Z-clip to DW bracket	Z-clip to z-bar	Rotofast™ snap-on anchor
	•	•	•	•	•		•	•	•		•			•		•	•

Core details

Dimensionally-stable 6-7 PCF fiberglass board for acoustic performance. Surface is completely adhered with a custom fabric, wrapping around to the back for fully-finished edges. Edges hardened for durability using resin.

Finish wrapped on all sides

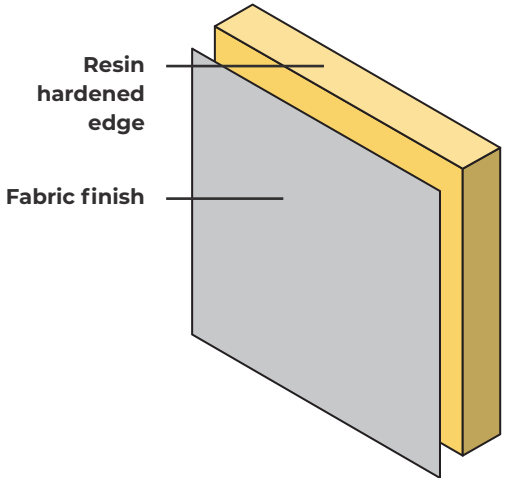

Fabrics brands

See our Look books for more inspiration.

Carnegie
DESIGNTEX
maharam
kvadrat
Knoll
Guilford of Maine

NRC & max sizes

- ◦ NAF core
- • Standard core

Custom shapes available for this product.

NRC ↓	Thickness	4'x10'		4'x12'		5'x10'		24 sqft	
0.50	½"			•					
0.70	¾"			•					
0.80	1"		◦	•		•			
0.95	1 ½"	•							
1.05	2"		◦	•		•			
1.10	3"		◦	•		•			
1.10	4"							•	◦

Hallways

Schools

Churches

Wall panel

Fabric | IR ▸ Respond IR

Compatibility																	
Edge details	Radius	Miter	Bevel	Square	Kerf/square	Mounting method	Resin spots	Impaling clips	Z-bar to z-bar	DW bracket to z-clip plate	Aluminum z-clip to z-bar	L-angle	Z-bar to z-clip plate	Spline	Z-clip to DW bracket	Z-clip to z-bar	Rotofast™ snap-on anchor
	•	•	•	•	•		•	•	•		•			•		•	•

Core details

Dimensionally-stable 6-7 PCF fiberglass board for acoustic performance.Layer of ⅛" impact-resistant (IR) material for added durability and tackability. Surface is completely adhered with a custom fabric, wrapping around to the back for fully-finished edges. Edges hardened for durability using resin.

Finish wrapped on all sides

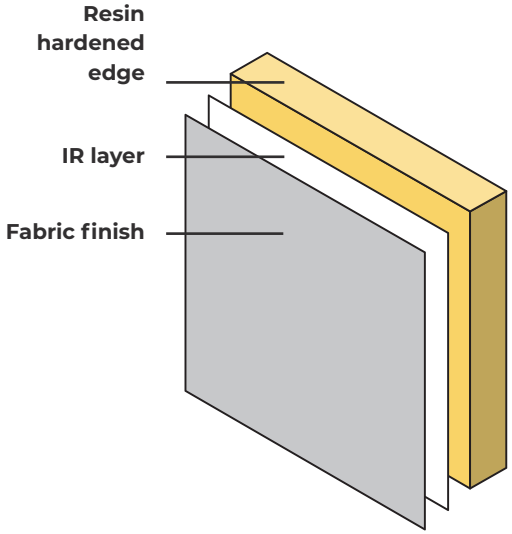

Fabrics brands

See our Look books for more inspiration.

Carnegie
DESIGNTEX
maharam
kvadrat
Knoll
Guilford of Maine

NRC & max sizes

- ◦ NAF core
- • Standard core

Custom shapes available for this product.

NRC ↓	Thickness	4'x10'		4'x12'		5'x10'		24 sqft	
0.70	⅝"	•							
0.80	⅞"	•							
0.90	1⅛"		◦	•		•			
1.00	1⅝"	•							
1.15	2⅛"		◦	•		•			
—	3⅛"		◦	•		•			
—	4⅛"							•	◦

Crowded areas

Gymnasiums

Event centers

Wall panel

Fabric | HI ▸ Respond HI

Compatibility

Edge details	Radius	Miter	Bevel	Square	Kerf/square	Mounting method	Resin spots	Impaling clips	Z-bar to z-bar	DW bracket to z-clip plate	Aluminum z-clip to z-bar	L-angle	Z-bar to z-clip plate	Spline	Z-clip to DW bracket	Z-clip to z-bar	Rotofast™ snap-on anchor
				•	•		•	•	•		•			•		•	•

Core details

Dimensionally-stable 6-7 PCF fiberglass board for acoustic performance. Surface is completely adhered with a custom fabric, wrapping around to the back for fully-finished edges. Layer of 1⁄16" resilient perforated copolymer for high-impact resistance. Edges hardened for durability using resin.

Finish wrapped on all sides

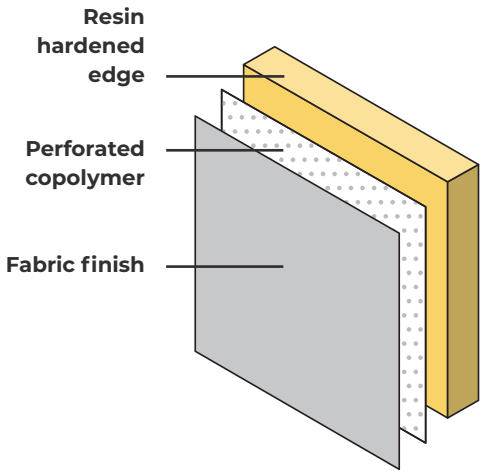

Fabrics brands

See our Look books for more inspiration.

Carnegie
DESIGNTEX
maharam
kvadrat
Knoll
Guilford of Maine

NRC & max sizes

- ◦ NAF core
- • Standard core

NRC ↓	Thickness	48"x 116"		24 sqft	
0.70	9⁄16"	•			
0.85	1 1⁄16"	•	◦		
1.00	2 1⁄16"	•	◦		
1.05	3 1⁄16"	•	◦		
1.05	4 1⁄16"				◦

Offices

High walls

Government buildings

Wall panel

Paint | IR ▸ New Dimensions

Compatibility																	
Edge details	Radius	Miter	Bevel	Square	Kerf/square	Mounting method	Resin spots	Impaling clips	Z-bar to z-bar	DW bracket to z-clip plate	Aluminum z-clip to z-bar	L-angle	Z-bar to z-clip plate	Spline	Z-clip to DW bracket	Z-clip to z-bar	Rotofast™ snap-on anchor
		•	•	•	•		•	•	•		•			•		•	•

Core details

Dimensionally-stable 6-7 PCF fiberglass board for acoustic performance. Layer of ⅛" impact-resistant (IR) material for added durability. Surface is completely adhered with specially-formulated scrim, and finished with custom paint, optionally left unpainted for finishing in the field. Edges hardened for durability using resin.

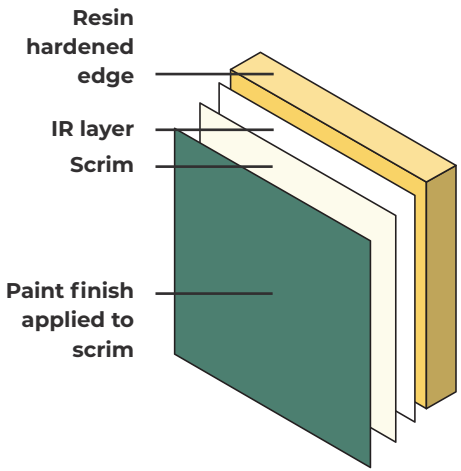

Finish wrapped on all sides

Paint

Custom color matching available.

SHERWIN WILLIAMS®

Unpainted

Products can optionally be left unpainted, for finishing in the field. Unpainted products are known as *Foundations*.

NRC & max sizes

- ◦ NAF core
- • Standard core

Custom shapes available for this product.

NRC ↓	Thickness	4'x10'		4'x12'		5'x10'		24 sqft	
0.90	1⅛"		◦			•			
—	1⅝"	•							
1.10	2⅛"		◦	•		•			
—	3⅛"		◦	•		•			
—	4⅛"							•	◦

Lobbies

Art spaces

Offices

Wall panel

Print | IR ▸ Acoustic Art

Compatibility

Edge details	Radius	Miter	Bevel	Square	Kerf/square	Mounting method	Resin spots	Impaling clips	Z-bar to z-bar	DW bracket to z-clip plate	Aluminum z-clip to z-bar	L-angle	Z-bar to z-clip plate	Spline	Z-clip to DW bracket	Z-clip to z-bar	Rotofast™ snap-on anchor
				•				•	•		•				•	•	•

Core details

Dimensionally-stable 6-7 PCF fiberglass board for acoustic performance. Layer of ⅛" impact-resistant (IR) material for added durability. Surface is completely adhered with specially-formulated scrim, and finished with custom printed imaging. Edges hardened for durability using resin and finished with solid black paint for decorative purposes.

Finish wrapped on all sides

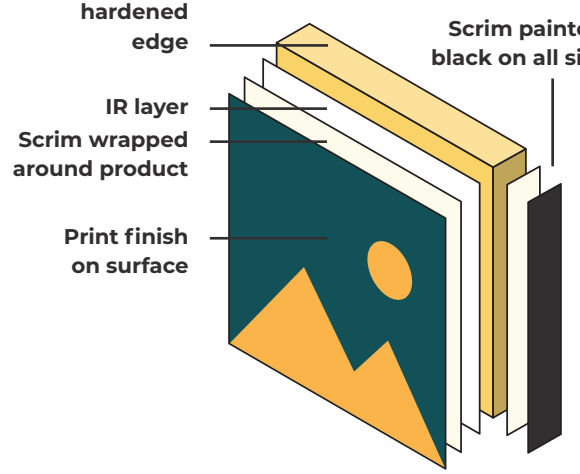

Print guidelines

Resolution: 300 DPI **Max file size:** 1GB

NRC & max sizes

NRC ↓	Thickness	Up to 4'x8'	
0.90	1⅛"	•	◦
—	2⅛"	•	

◦ NAF core
• Standard core

Minimum size of 12"x12." Larger images can be spread over multiple panels.

Gyms

Athletic centers

High-abuse environment

Wall panel

Copolymer | HI ▸ Metro Rebound

Compatibility

Edge details	Radius	Miter	Bevel	Square	Kerf/square	Mounting method	Resin spots	Impaling clips	Z-bar to z-bar	DW bracket to z-clip plate	Aluminum z-clip to z-bar	L-angle	Z-bar to z-clip plate	Spline	Z-clip to DW bracket	Z-clip to z-bar	Rotofast™ snap-on anchor
				•			•		•		•					•	•

Core details

Dimensionally-stable 6-7 PCF fiberglass board for acoustic performance. Surface completely adhered with 1⁄16" sheet of perforated copolymer with edges heat-formed over each side for a uniform and high-impact resistant finish.

Finish wrapped on all sides

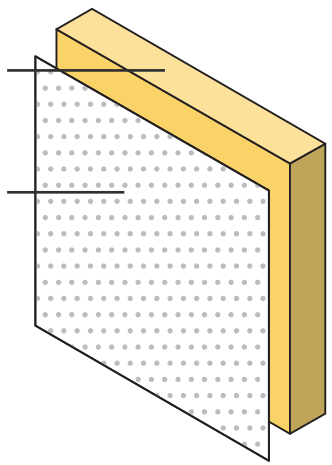

Copolymer

Custom color matching, & woodgrains available.

KYDEX UrbanForest

NRC & max sizes

- ◦ NAF core
- • Standard core

Minimum size of 12"x12."

Note: 2 1⁄16" woodgrain copolymer panels have a max width of 47"

NRC ↓	Thickness	48"x116"		48"x115"		48"x114"	
0.80	1 1⁄16"	•	◦				
—	1 9⁄16"			•			
0.95	2 1⁄16"					•	◦

Offices

Libraries

Churches

Wall panel

Mineral Core ▸ TK/AC

Compatibility

Edge details	Radius	Miter	Bevel	Square	Kerf/square	Mounting method	Resin spots	Impaling clips	Z-bar to z-bar	DW bracket to z-clip plate	Aluminum z-clip to z-bar	L-angle	Z-bar to z-clip plate	Spline	Z-clip to DW bracket	Z-clip to z-bar	Rotofast™ snap-on anchor
				•				•		•			•				

Core details

High-density mineral board for acoustic performance. Surface is completely adhered with a custom fabric, wrapping around to the back for fully-finished edges.

Finish wrapped on all sides

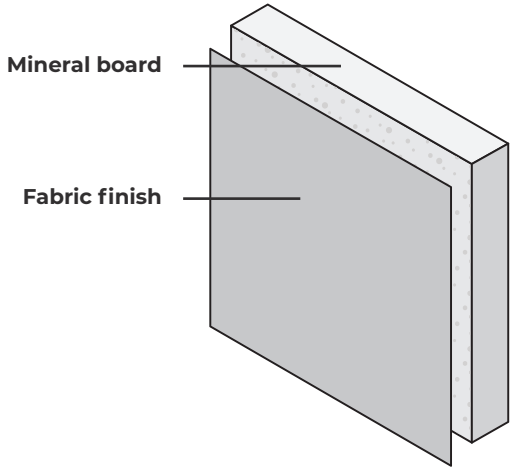

Fabrics brands

See our Look books for more inspiration.

Carnegie
DESIGNTEX
maharam
kvadrat
Knoll
Guilford of Maine

NRC & max sizes

- Mineral core

NRC ↓	Thickness	4'x10'
—	½" (unperforated)	•
0.35	⅝" (perforated)	•

Ceiling panels

Need a seamless wall or ceiling solution?

Check out conwed.com/eurospan to see how to start designing an acoustic solution without limits. Discrete, or the centerpiece of the space, it's your call.

Music rooms

Libraries

Event centers

Ceiling panel

Fabric | A ▸ Respond A

Compatibility

Edge details	Radius	Miter	Bevel	Square	Mounting method	Resin spots	Z-bar to z-bar	Rotofast™ snap-on anchor
	•	•	•	•		•	•	•

Core details

Dimensionally-stable 6-7 PCF fiberglass board for acoustic performance. Surface is completely adhered with a custom fabric, wrapping around to the back for fully-finished edges.

Finish wrapped on all sides

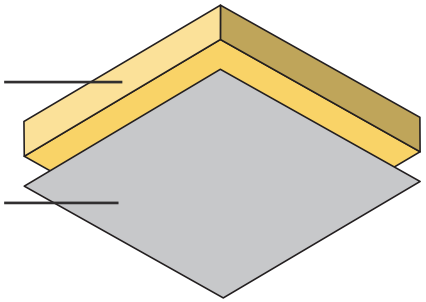

Fabrics brands

See our Look books for more inspiration.

Carnegie
DESIGNTEX
maharam
kvadrat
Knoll
Guilford of Maine

NRC & max sizes

- ◦ NAF core
- • Standard core

Custom shapes available for this product.

NRC ↓	Thickness	4'x10'		4'x12'		5'x10'		16 sqft	
0.55	½"	•							
0.70	¾"			•		•			
0.80	1"		◦	•		•			
0.95	1 ½"	•							
1.05	2"		◦	•		•			
1.10	3"								◦

Schools

Hallways

Event centers

Ceiling panel

Fabric | IR ▸ Respond IR

Compatibility

Edge details	Radius	Miter	Bevel	Square	Mounting method	Resin spots	Z-bar to z-bar	Rotofast™ snap-on anchor
	•	•	•	•		•	•	•

Core details

Dimensionally-stable 6-7 PCF fiberglass board for acoustic performance. Surface is completely adhered with a custom fabric, wrapping around to the back for fully-finished edges. Layer of ⅛" impact-resistant (IR) material for added durability and tackability.

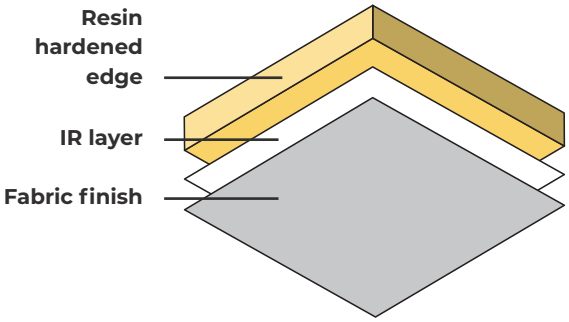

Finish wrapped on all sides

Fabrics brands

Carnegie
DESIGNTEX
maharam
kvadrat
Knoll
Guilford of Maine

See our Look books for more inspiration.

NRC & max sizes

- ◦ NAF core
- • Standard core

Custom shapes available for this product.

NRC ↓	Thickness	4'x10'		4'x12'		5'x10'		16 sqft	
0.70	⅝"	•							
0.80	⅞"	•							
0.90	1 ⅛"		◦	•		•			
1.00	1 ⅝"	•							
1.15	2 ⅛"		◦	•		•			
—	3 ⅛"								◦

Schools

Churches

Goverment buildings

Ceiling panel

Fabric | HI ▸ Respond HI

Compatibility

Edge details	Radius	Miter	Bevel	Square	Mounting method	Resin spots	Z-bar to z-bar	Rotofast™ snap-on anchor
				•		•	•	•

Core details

Dimensionally-stable 6-7 PCF fiberglass board for acoustic performance. Surface is completely adhered with a custom fabric, wrapping around to the back for fully-finished edges. Layer of 1⁄16" resilient perforated copolymer for high-impact resistance. Edges hardened for durability using resin.

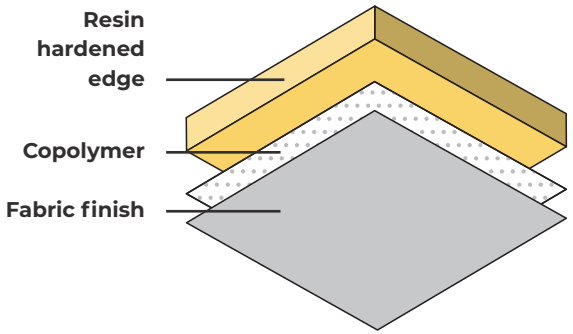

Finish wrapped on all sides

Fabrics brands

Carnegie
DESIGNTEX
maharam
kvadrat
Knoll
Guilford of Maine

See our Look books for more inspiration.

NRC average & max sizes

- ◦ NAF core
- • Standard core

Minimum size of 12"x12."

Thickness		36"x 96"		24 sqft	
0.90	1 1⁄16"	•	◦		
1.00	2 1⁄16"	•	◦		
1.05	3 1⁄16"	•	◦		
1.05	4 1⁄16"			•	

Offices

Conference rooms

Event centers

Ceiling panel

Paint | A ▸ New Dimensions

Compatibility

Edge details	Radius	Miter	Bevel	Square	Mounting method	Resin spots	Z-bar to z-bar	Rotofast™ snap-on anchor
		•	•	•		•	•	•

Core details

Dimensionally-stable 6-7 PCF fiberglass board for acoustic performance. Surface is completely adhered with specially-formulated scrim, and finished with custom paint, optionally left unpainted for finishing in the field. Edges hardened for durability using resin.

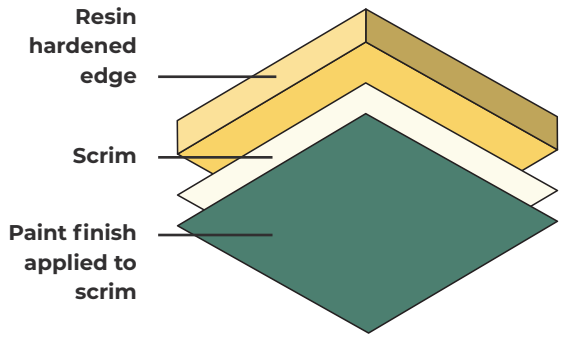

Finish wrapped on all sides

Paint

Custom color matching available.

SHERWIN WILLIAMS®

Unpainted

Products can optionally be left unpainted, for finishing in the field. Unpainted products are known as *Foundations*.

NRC & max sizes

- ◦ NAF core
- • Standard core

Custom shapes available for this product.

NRC ↓	Thickness	4'x10'		5'x10'		16 sqft	
—	1"		◦	•			
—	1½"	•					
—	2"		◦	•			
—	3"						◦

Schools

Churches

Goverment buildings

Ceiling panel

Paint | IR ▸ New Dimensions

Compatibility

Edge details	Radius	Miter	Bevel	Square	Mounting method	Resin spots	Z-bar to z-bar	Rotofast™ snap-on anchor
	•	•	•	•		•	•	•

Core details

Dimensionally-stable 6-7 PCF fiberglass board for acoustic performance. Layer of ⅛" impact-resistant (IR) material for added durability and tackability. Surface is completely adhered with a custom fabric, wrapping around to the back for fully-finished edges. Edges hardened for durability using resin.

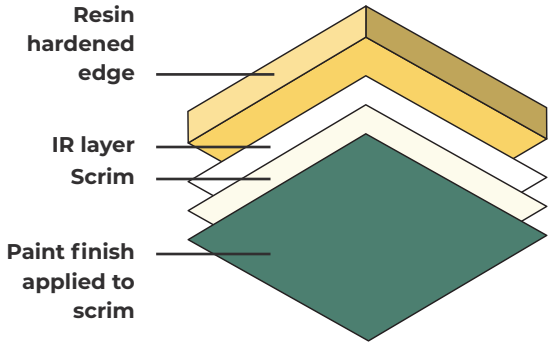

Finish wrapped on all sides

Paint

Custom color matching available.

SHERWIN WILLIAMS®

Unpainted

Products can optionally be left unpainted, for finishing in the field. Unpainted products are known as *Foundations*.

NRC & max sizes

- ◦ NAF core
- • Standard core

Custom shapes available for this product.

NRC ↓	Thickness	4'x10'		5'x10'		16 sqft	
0.90	1 ⅛"		◦	•			
—	1⅝"			•			
1.10	2 ⅛"		◦	•			
—	3 ⅛"					•	◦

Conference rooms

Schools

Lobbies

Ceiling panel

Print | IR ▸ Acoustic Art

Compatibility	
Edge details	
Radius	
Miter	
Bevel	
Square	•
Mounting method	
Resin spots	•
Z-bar to z-bar	•
Rotofast™ snap-on anchor	•

Core details

Dimensionally-stable 6-7 PCF fiberglass board for acoustic performance. Layer of ⅛" impact-resistant (IR) material for added durability and tackability. Surface is completely adhered with specially-formulated scrim, and finished with custom-printed imaging. Edges hardened for durability using resin and finished with solid black paint for decorative purposes.

Finish wrapped on all sides

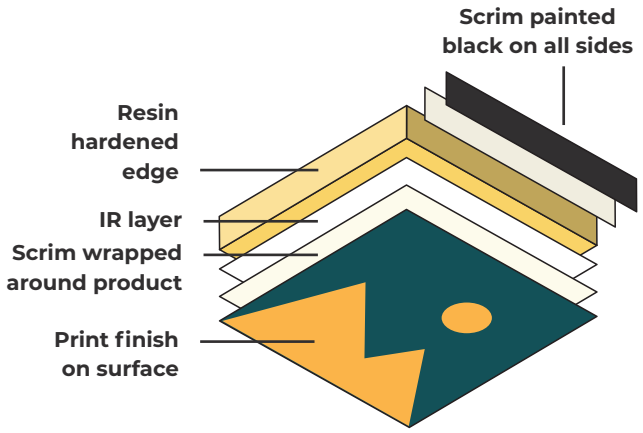

Print guidelines

Resolution: 300 DPI **Max file size:** 1GB

NRC & max sizes

NRC ↓	Thickness	Up to 4'x8'	
0.90	1⅛"	•	◦
—	2⅛"	•	

◦ NAF core
• Standard core

Minimum size of 12"x12." Larger images can be spread over multiple panels.

Gymnasiums

Athletic centers

High-abuse environments

Ceiling panel

Copolymer | HI ▸ Metro Rebound

Compatibility

Edge details	Radius	Miter	Bevel	Square	Mounting method	Resin spots	Z-bar to z-bar	Rotofast™ snap-on anchor
				•			•	•

Core details

Dimensionally-stable 6-7 PCF fiberglass board for acoustic performance. Surface completely adhered with 1⁄16" sheet of perforated copolymer with edges heat-formed over each side for a uniform and high-impact resistant finish.

Finish wrapped on all sides

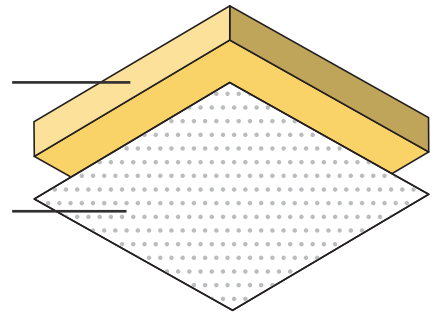

Copolymer

Custom color matching, & woodgrains available.

KYDEX UrbanForest

NRC & max sizes

- ◦ NAF core
- • Standard core

Minimum size of 12"x12."

NRC ↓	Thickness	Up to 2'x4'	
0.80	1 1⁄16"	•	◦
—	1 9⁄16"	•	
0.95	2 1⁄16"	•	◦

Tiles

Build your tile

Select your finish

Fabric

Paint

Print

Levels of durability

Standard durability

Impact resistant

Durability & finish compatibility

	Fabric A	Fabric IR	Fabric HI	Paint A	Paint IR	Print IR	Copolymer HI
Tiles	✓	✓		✓		✓	

1" → 2 ⅛"

Available in a range of thicknesses.

NRC

Each product combination has its own NRC value. These values are obtained from tests conducted according to ASTM C423 procedures in an NVLAP-accredited laboratory.

Edge details

Lay-in square

Tegular

Gridlock

Mounting

Tiles are placed directly into a drop ceiling grid.

Music rooms

Libraries

Conference rooms

Tile

Fabric | A ▸ Respond A

Compatibility

Edge details	Lay-in square	Gridlock	Tegular 15/16"	Tegular 9/16"	Mounting method	Standard 15/16"	Designer 9/16"
	•	•	•	•		•	•

Core details

Dimensionally-stable 6-7 PCF fiberglass board for acoustic performance. Surface is completely adhered with a custom fabric, wrapping around for fully-finished edges. Edges hardened for durability using resin.

Finish wrapped on all sides

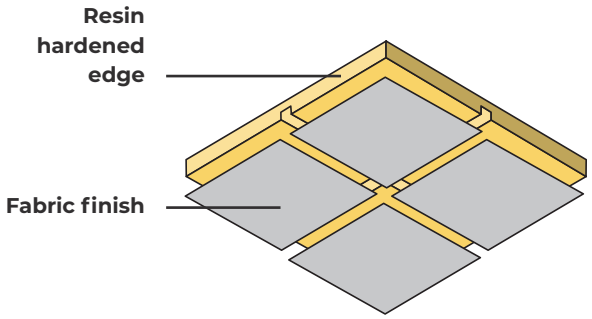

Fabrics brands

Carnegie
DESIGNTEX
maharam
kvadrat
Knoll
Guilford of Maine

See our Look books for more inspiration.

NRC average & max sizes

- ◦ NAF core
- • Standard core

NRC ↓	Thickness	Up to 2'x8'	
0.80	1"	•	◦
0.95	1½"	•	
1.05	2"	•	◦

Schools

Hallways

Event centers

Tile

Fabric | IR ▸ Respond IR

Compatibility	
Edge details	
Lay-in square	•
Gridlock	•
Tegular 15/16"	•
Tegular 9/16"	•
Mounting method	
Standard 15/16"	•
Designer 9/16"	•

Core details

Dimensionally-stable 6-7 PCF fiberglass board for acoustic performance. Surface is completely adhered with a custom fabric, wrapping around for fully-finished edges. Layer of ⅛" impact-resistant (IR) material for added durability and tackability. Edges hardened for durability using resin.

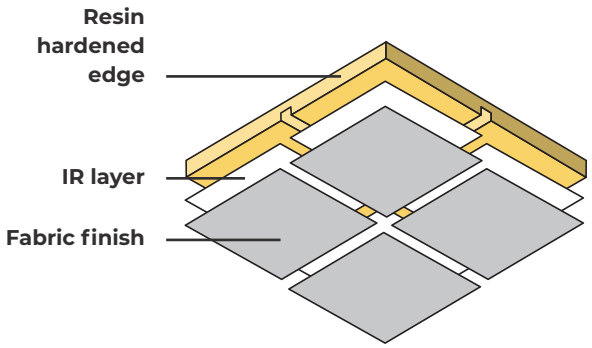

Finish wrapped on all sides

Fabrics brands

Carnegie

DESIGNTEX

maharam

kvadrat

Knoll

Guilford of Maine

See our Look books for more inspiration.

NRC average & max sizes

- ◦ NAF core
- • Standard core

NRC ↓	Thickness	Up to 2'x8'	
0.90	1 ⅛"	•	◦
1.00	1 ⅝"	•	
1.05	2 ⅛"	•	◦

Conference rooms

Schools

Lobbies

Tile

Paint | A ▸ New Dimensions

Compatibility	
Edge details	•
Lay-in square	
Gridlock	
Tegular 15/16"	
Tegular 9/16"	
Mounting method	•
Standard 15/16"	•
Designer 9/16"	

Core details

Dimensionally-stable 6-7 PCF fiberglass board for acoustic performance. Surface is completely adhered with specially-formulated scrim, and finished with custom paint; optionally left unpainted for finishing in the field. Edges hardened for durability using resin.

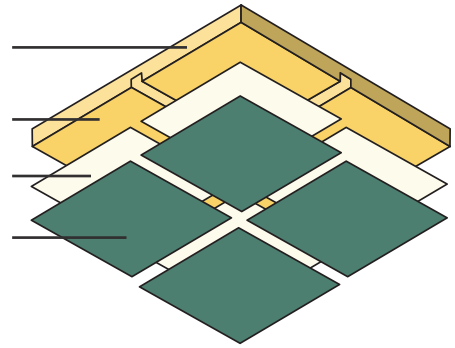

Finish wrapped on all sides

Paint

Custom color matching available.

SHERWIN WILLIAMS®

Unpainted

Products can optionally be left unpainted, for finishing in the field. Unpainted products are known as *Foundations*.

NRC average & max sizes

- ◦ NAF core
- • Standard core

NRC ↓	Thickness	Up to 2'x8'	
—	1"	•	◦
—	1 ½"	•	
—	2"	•	◦

Conference rooms

Schools

Lobbies

Tile

Print | IR ▸ Acoustic Art

Compatibility

Edge details	Lay-in square	Gridlock	Tegular 15/16"	Tegular 9/16"	Mounting method	Standard 15/16"	Designer 9/16"
	•					•	•

Core details

Dimensionally-stable 6-7 PCF fiberglass board for acoustic performance. Surface is completely adhered with specially-formulated scrim, and finished with custom printed imaging. Layer of ⅛" impact-resistant (IR) material for added durability and tackability. Edges hardened for durability using resin and finished with solid black paint for decorative purposes.

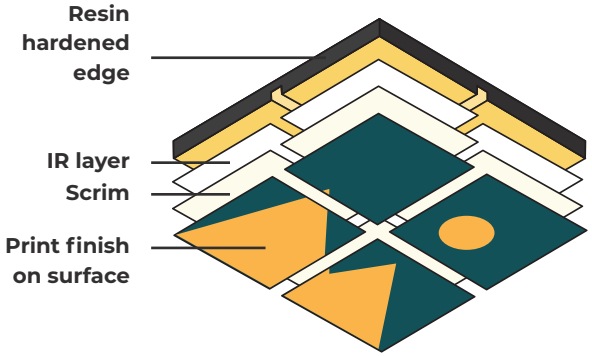

Finish wrapped on all sides

Print guidelines

Resolution: 300 DPI **Max file size:** 1GB

NRC & max sizes

NRC ↓	Thickness	Up to 2'x8'	
0.90	1 ⅛"	•	◦
—	2 ⅛"	•	

◦ NAF core
• Standard core

Minimum size of 12"x12." Larger images can be spread over multiple panels.

Baffles

Build your baffle

Select your finish

Fabric

Paint

Print

Levels of durability

Standard durability

Impact resistant

Durability & finish compatibility

	Fabric A	Fabric IR	Fabric HI	Paint A	Paint IR	Print IR	Copolymer HI
Tiles	✓	✓		✓		✓	

1" → 4 ½"

Available in a range of thicknesses.

Metric Sabins

Each product combination has its own metric sabin value. These values are obtained from tests conducted according to ASTM C423 procedures in an NVLAP-accredited laboratory.

Edge details

Square

Half bevel

Mounting

Baffle hanger

Baffle hangers hold the product together to create connection points.

Express hanging system

Conwed's unique mounting solution for fast, easy, and square baffle installation.

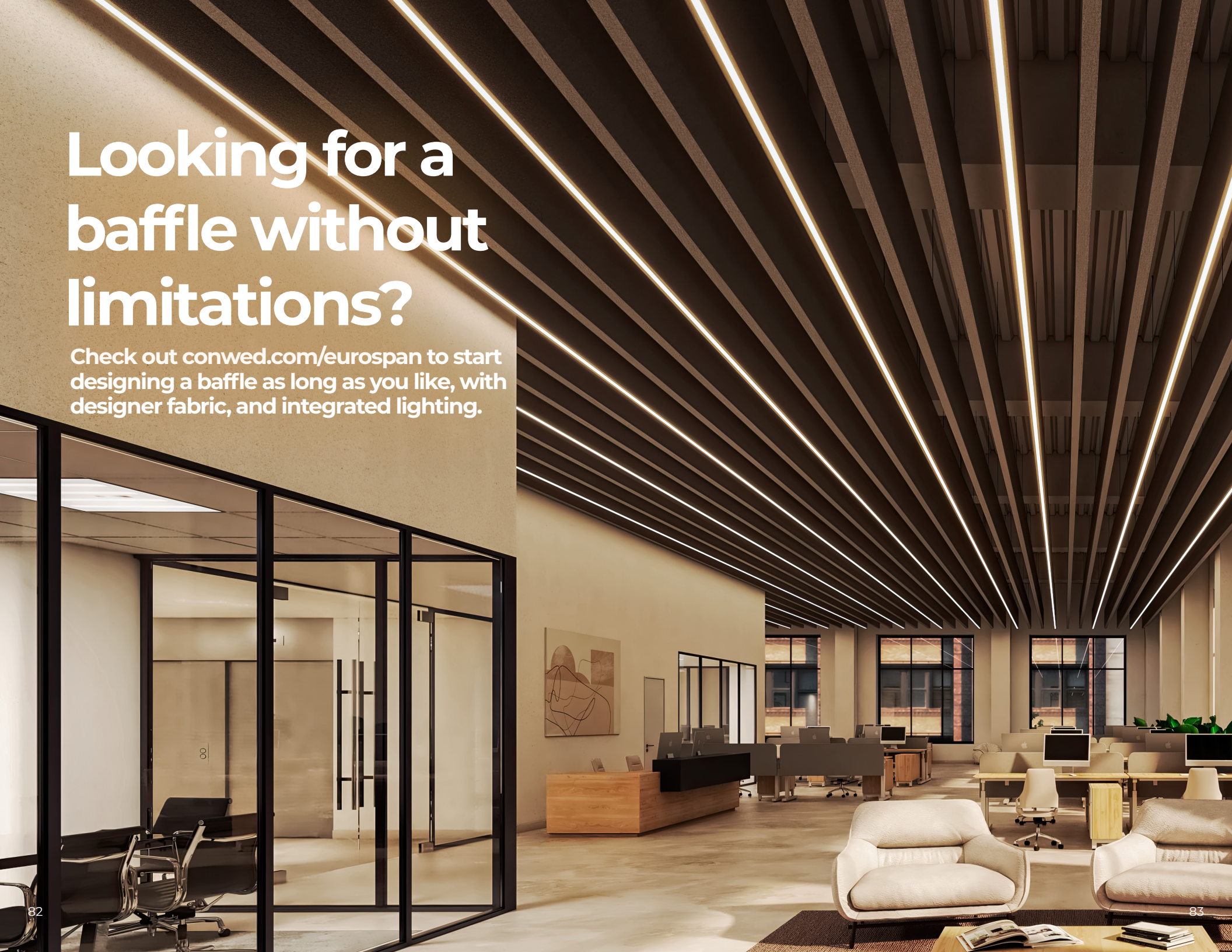

Looking for a baffle without limitations?

Check out conwed.com/eurospan to start designing a baffle as long as you like, with designer fabric, and integrated lighting.

Offices

Lobbies

Museums

Baffles

Fabric | A ▸ Respond A

Compatibility	
Edge details	
Square	•
Half bevel	•
Mounting method	
Baffle hanger	•
Express hanging system	•

Core details

Dimensionally-stable 6-7 PCF fiberglass boards adheared together for acoustic performance. Edges hardened for durability using resin, with connection points preinstalled. Surface is completely adhered with a custom fabric, wrapping around to the back for fully-finished edges.

Finish wrapped on all sides

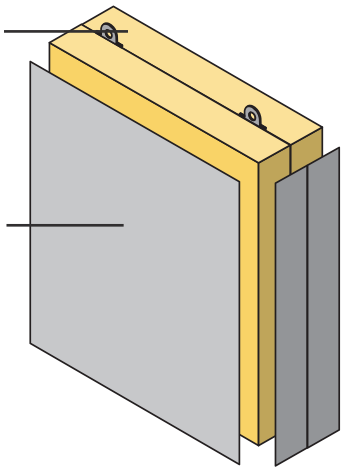

Fabrics brands

Carnegie
DESIGNTEX
maharam
kvadrat
Knoll
Guilford of Maine

See our Look books for more inspiration.

NRC average & max sizes

- ◦ NAF core
- • Standard core

Custom shapes available for this product

Minimum height of 5"

Metric Sabins	Thickness	4' x10'		4'x12'		5'x10'	
—	2"		◦	•		•	
—	3"	•					
—	4"		◦	•		•	

Schools

Low suspension

Commercial spaces

Baffles

Fabric | IR ▸ Respond IR

Compatibility	
Edge details	
Square	•
Half bevel	•
Mounting method	
Baffle hanger	•
Express hanging system	•

Core details

Dimensionally-stable 6-7 PCF fiberglass boards adheared together for acoustic performance. Layer of ⅛" impact resistant material for added durability. Edges hardened for durability using resin, with connection points preinstalled. Surface is completely adhered with a custom fabric, wrapping around to the back for fully-finished edges.

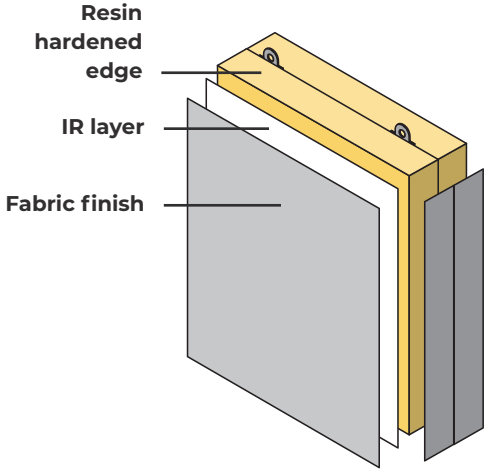

Finish wrapped on all sides

Fabrics brands

Carnegie
DESIGNTEX
maharam
kvadrat
Knoll
Guilford of Maine

See our Look books for more inspiration.

NRC average & max sizes

Metric Sabins	Thickness	4'x10'		4'x12'		5'x10'	
—	2 ½"		◦	•		•	
—	3 ½"	•					
—	4 ½"		◦	•		•	

◦ NAF core
• Standard core

Custom shapes available for this product

Minimum height of 5"

Offices

Lobbies

Museums

Baffles

Paint | A ▸ New Dimensions

Compatibility	
Edge details	
Square	•
Half bevel	
Mounting method	
Baffle hanger	•
Express hanging system	•

Core details

Dimensionally-stable 6-7 PCF fiberglass board for acoustic performance. Edges hardened for durability using resin, with connection points preinstalled. Surface is completely adhered with specially-formulated scrim, and finished with custom-paint; optionally left unpainted for finishing in the field.

Finish wrapped on all sides

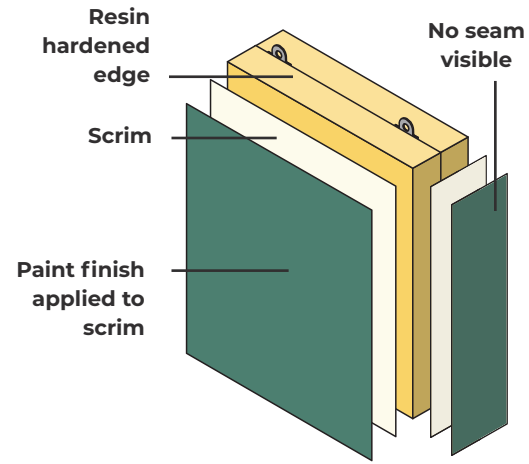

Paint

Custom color matching available.

SHERWIN WILLIAMS®

Unpainted

Products can optionally be left unpainted, for finishing in the field. Unpainted products are known as *Foundations*.

NRC average & max sizes

Metric Sabins	Thickness	4'x10'		5'x10'	
—	1 ½"	•			
1.54/sqft	2"		◦	•	

◦ NAF core

• Standard core

Minimum height of 5"

Offices

Lobbies

Museums

Baffles

Print | IR ▸ Acoustic Art

Compatibility	
Edge details	
Square	•
Half bevel	
Mounting method	
Baffle hanger	•
Express hanging system	•

Core details

Dimensionally-stable 6-7 PCF fiberglass board for acoustic performance. Layer of ⅛" impact-resistant (IR) material for added durability. Edges painted black and hardened for durability using resin, with preinstalled connection points. Surface is completely adhered with specially-formulated scrim, and finished with custom-printed image.

Finish wrapped on all sides

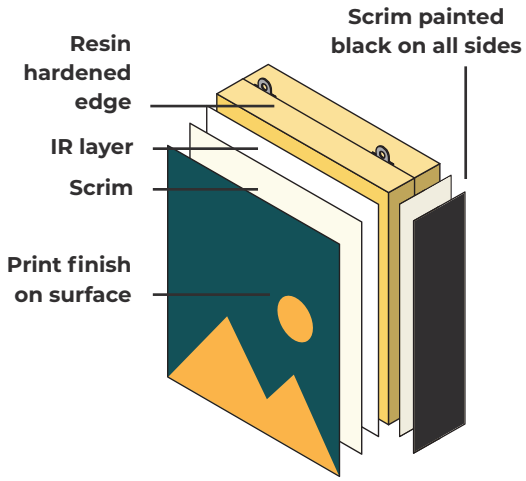

Print guidelines

Resolution: 300 DPI **Max file size:** 1GB

NRC & max sizes

NRC	Thickness	Up to 4'x8'	
0.90*	2 ¼"	•	◦

◦ NAF core

• Standard core

Minimum size of 12"x12." Larger images can be spread over multiple panels.

*These NRC values are from direct-attach tests of the same product. NRC values for this application are equal to or greater than these values.

Clouds

Build your cloud

Select your finish

Fabric

Paint

Print

Levels of durability

Standard durability

Impact resistant

Durability & finish compatibility

	Fabric A	Fabric IR	Fabric HI	Paint A	Paint IR	Print IR	Copolymer HI
Cloud	✓	✓		✓		✓	

½" → 3 ⅛"

Available in a range of thicknesses.

NRC

Each product combination has its own NRC value. These values are obtained from tests conducted according to ASTM C423 procedures in an NVLAP-accredited laboratory.

Edge details

Square

Half bevel

Full radius

Half radius

Mounting

Rotofast™ cloud anchor

Acoustical anchor

Offices

Lobbies

Museums

Clouds

Fabric | A ▸ Respond A

Compatibility								
Edge details	Radius	Miter	Bevel	Square	Mounting method	Resin spots	Acoustical anchors	Rotofast™ cloud anchors
	•	•	•	•		•	•	•

Core details

Dimensionally-stable 6-7 PCF fiberglass board for acoustic performance. Surface is completely adhered with a custom fabric, wrapping around to the back for fully finished edges. Edges hardened for durability using resin.

Finish wrapped on all sides

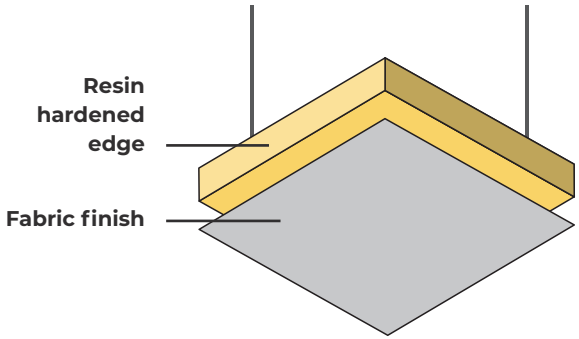

Fabrics brands

Carnegie
DESIGNTEX
maharam
kvadrat
Knoll
Guilford of Maine

See our Look books for more inspiration.

NRC & max sizes

- ◦ NAF core
- • Standard core

Custom shapes available for this product.

NRC ↓	Thickness	4'x10'		4'x12'		5'x10'		16 sqft	
0.55	½"			•					
0.70	¾"			•					
0.80	1"		◦	•		•			
0.95	1 ½"	•							
1.05	2"		◦	•		•			
1.10	3"							•	◦

Schools

Low suspension

Commercial spaces

Clouds

Fabric | IR ▸ Respond IR

Compatibility

Edge details	Radius	Miter	Bevel	Square	Mounting method	Resin spots	Acoustical anchors	Rotofast™ cloud anchors
	•	•	•	•		•	•	•

Core details

Dimensionally-stable 6-7 PCF fiberglass board for acoustic performance. Surface is completely adhered with a custom fabric, wrapping around to the back for fully finished edges. Layer of ⅛" impact-resistant (IR) material for added durability and tackability. Edges hardened for durability using resin.

Finish wrapped on all sides

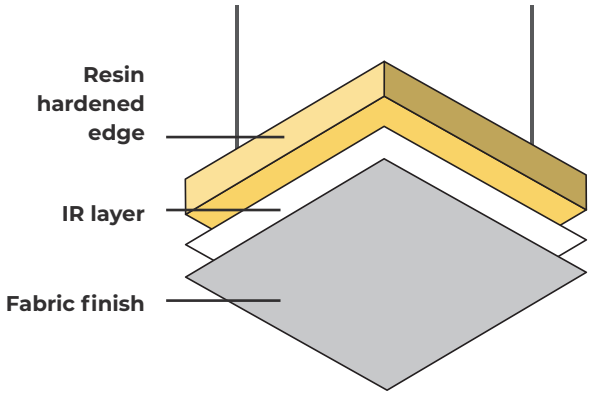

Fabrics brands

Carnegie
DESIGNTEX
maharam
kvadrat
Knoll
Guilford of Maine

See our Look books for more inspiration.

NRC & max sizes

- ◦ NAF core
- • Standard core

Custom shapes available for this product.

NRC* ↓	Thickness	4'x10'		4'x12'		5'x10'		16 sqft	
0.90	1 ⅛"		◦	•		•			
1.00	1 ⅝"	•							
1.05	2 ⅛"		◦			•			
—	3 ⅛"							•	◦

* These NRC values are from direct-attach tests of the same product. NRC values for this application are equal to or greater than these values.

Offices

Lobbies

Museums

Clouds

Paint | A ▸ New Dimensions

Compatibility

Edge details	Radius	Miter	Bevel	Square	Mounting method	Resin spots	Acoustical anchors	Rotofast™ cloud anchors
		•	•	•		•	•	•

Core details

Dimensionally-stable 6-7 PCF fiberglass board for acoustic performance. Surface is completely adhered with specially-formulated scrim, and finished with custom paint; optionally left unpainted for finishing in the field. Edges hardened for durability using resin.

Finish wrapped on all sides

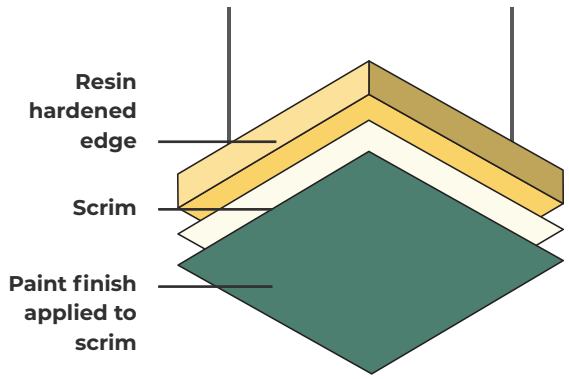

Paint

Custom color matching available.

SHERWIN WILLIAMS®

Unpainted

Products can optionally be left unpainted, for finishing in the field. Unpainted products are known as *Foundations*.

NRC & max sizes

- ◦ NAF core
- • Standard core

Custom shapes available for this product.

NRC ↓	Thickness	4'x10'		5'x10'		16 sqft	
—	1"		◦	•			
—	1 ½"	•					
—	2"		◦	•			
—	3"					•	◦

Offices

Lobbies

Museums

Clouds

Print | IR ▸ Acoustic Art

Compatibility

Edge details	Radius	Miter	Bevel	Square	Mounting method	Resin spots	Acoustical anchors	Rotofast™ cloud anchors
				•		•	•	•

Core details

Dimensionally-stable 6-7 PCF fiberglass board for acoustic performance. Surface is completely adhered with specially-formulated scrim, and finished with custom printed imaging. Layer of ⅛" impact-resistant (IR) material for added durability and tackability. Edges hardened for durability using resin and finished with solid black paint for decorative purposes.

Finish wrapped on all sides

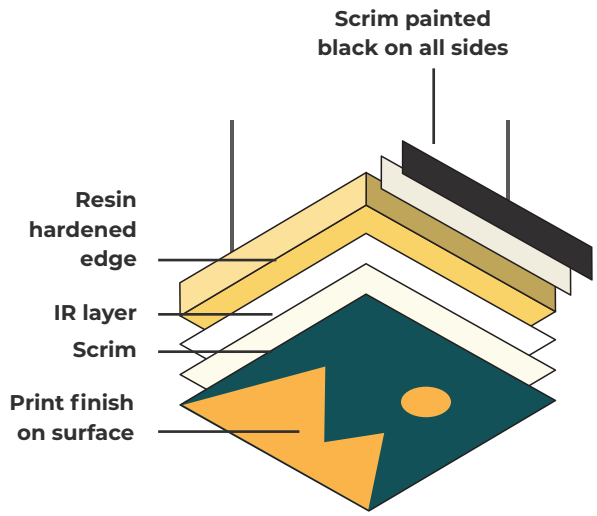

Print guidelines

Resolution: 300 DPI **Max file size:** 1GB

NRC & max sizes

- ◦ NAF core
- • Standard core

Minimum size of 12"x12." Larger images can be spread over multiple panels.

NRC* ↓	Thickness	Up to 4'x8'	
0.90	1 ⅛"	•	◦
—	2 ⅛"	•	◦

* These NRC values are from direct-attach tests of the same product. NRC values for this application are equal to or greater than these values.

STREAMLINE

BY CONWED

Watch the video ▸

50 PANELS IN THREE WEEKS

How it works

This rapid pace is possible thanks to years of refining our manufacturing process. Each item ordered could be a combination of any of the following options. Orders over 50 items can still be placed; customer service will reach out to you with an estimated lead time.

Select your products

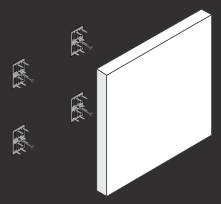

Wall panel with impaling clips & no resin spots
Perimeter adhesive required

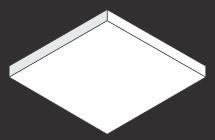

Ceiling panel & no resin spots

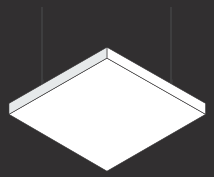

Cloud & no resin spots

Select thicknesses

Thickness	NRC ↓
1"	**0.80**
2"	**1.05**

Select fabrics

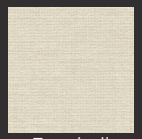

Eggshell
144
Uses scrim

White
224
Uses scrim

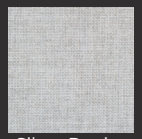

Silver Papier
538

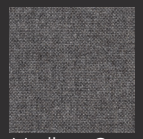

Medium Grey
298

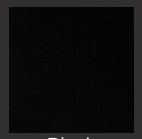

Black
408

Optional mounting upgrades

Wall & ceiling panels

Rotofast™
Snap-on Anchor

Clouds

Rotofast™
cloud anchors